TECAPRES®

Ø32mm
400daN

TPK 32

VDI SAFETY

PED 2014/68/UE

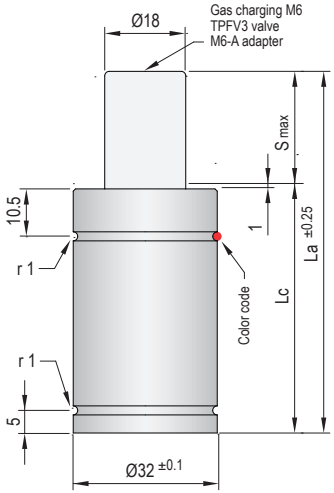

Pressure medium	Nitrogen (N_2)
Max. charging pressure	155 Bar
Min. charging pressure	25 Bar
Rod seal area	2,54 cm²
Operating temperature	0ºC - 80ºC
Force increase by temperature	0,33 %/ºC
Max. stem speed	1,2 m/s
Maintenance kit	Kit K32

Maximum strokes / minute (at 20ºC)

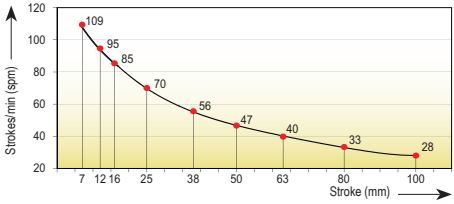

Code	Smax mm	La mm	Lc mm	V l	Kg
TPK 32x7	7	49	42	0,005	0,20
TPK 32x12	12	59	47	0,008	0,21
TPK 32x16	16	67	51	0,011	0,23
TPK 32x25	25	85	60	0,017	0,26
TPK 32x38	38	111	73	0,025	0,29
TPK 32x50	50	135	85	0,033	0,33
TPK 32x63	63	161	98	0,041	0,37
TPK 32x80	80	195	115	0,052	0,43
TPK 32x100	100	235	135	0,065	0,49

Color code	Fa daN	90% F daN	P Bar
GR *(Green)*	100 (±10)	≈ 155	40
BL *(Blue)*	200 (±15)	≈ 310	80
RD *(Red)*	300 (±20)	≈ 465	120
YW *(Yellow)*	400 (±20)	≈ 600	155
(Other forces)	65 - 400	≈ 100 - 600	25 - 155

The black color code denotes a different pressure from that which the customer could choose when ordering between the minimum charging pressure and the maximum charging pressure. If not otherwise specified, the gas spring will be supplied in the yellow code version (YW).

How to order

TPK 32 x **38** **YW**

Model | Stroke | Color code

Force/stroke ratio

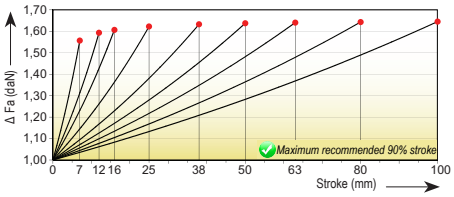

Initial force/charging pressure ratio

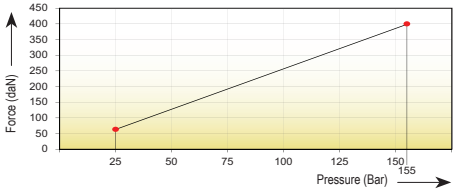

Assembly possibilities

Follow guidelines
Page 287

DROP-IN

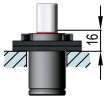

FS 32
FS 32/1·FSC 32

FS 32
FS 32/1·FSC 32

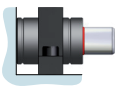

FI 32·FI 32/1